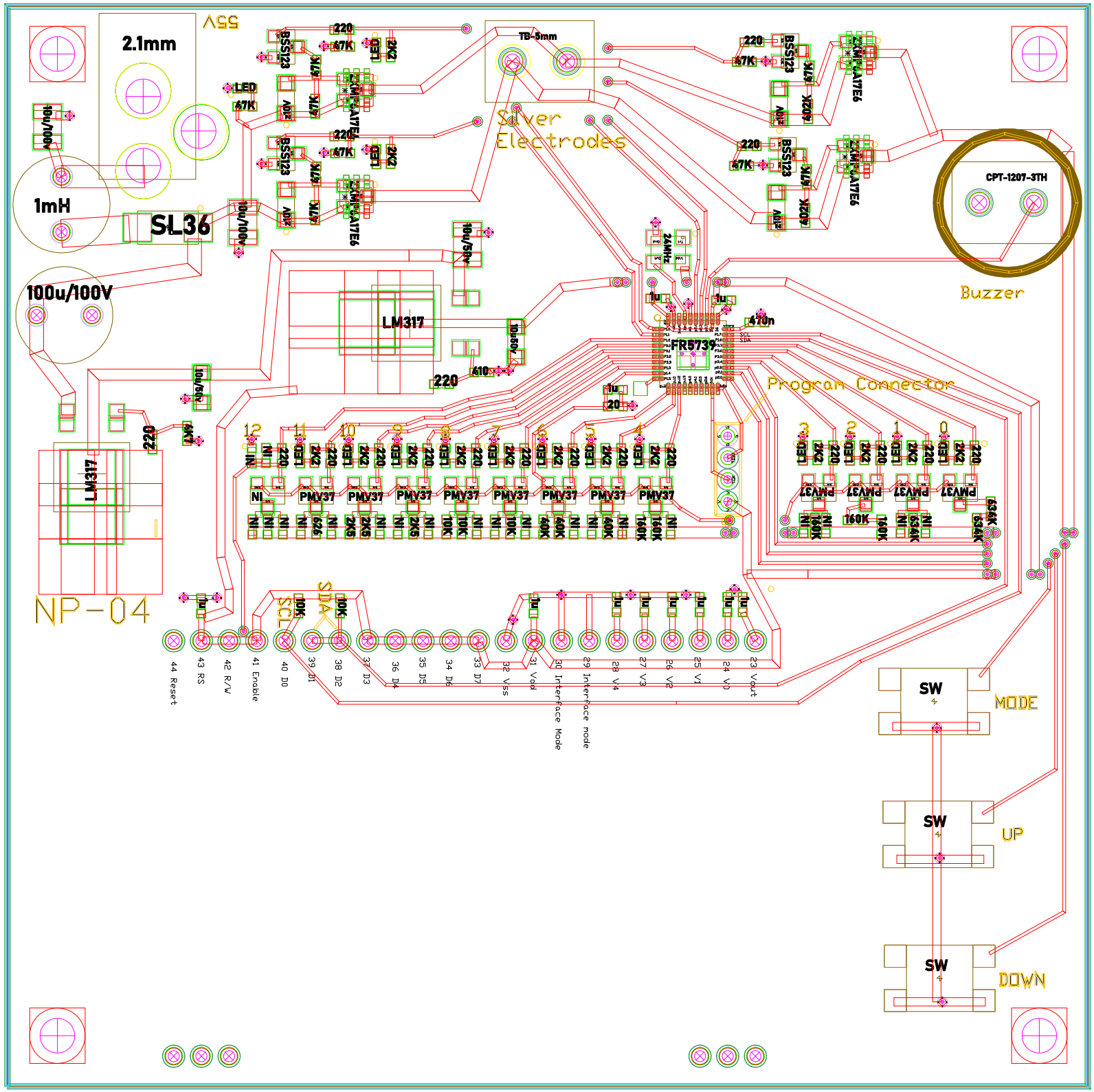

XO-24MHz - 1
LM317 - 2
MSP430FR5739 - 1
ZXMP6A17E6- 4
BSS123 - 4
10Vzener - 4
PMV37 - 12
LED - 15
SL36 -1

4K7 - 1
410- 1
220 - 19

402K - 2
47K - 11
2K2 - 14

0.1% resistors
20- 1
626- 1
2K5- 3
10K- 3+2
40K- 3
160K- 5
634K- 3

10uF/50V(1206) - 3
10uF/100V(1210) - 2
1uF/16V(0603) -11
470nF(core)- 1

SW - 3
TB-5mm - 1
1mH- 1
100uF/100V- 1
DC jack2m1- 1
EA DOGM204N-A - 1
CPT-1207-3TH- 1